RANGER® COUNT 3000

Counting Scale

Reliable Counting Scales to Ensure Accurate Results

The Ranger Count 3000 is a high-precision dedicated counting scale with advanced software for counting and packaging parts. With low Average Piece Weight (APW) alert and automatic APW recalculation, the Ranger Count offers 1:1,500,000 internal counting resolution to handle counting even the smallest parts precisely.

Standard Features:

- Accurate weighing and counting are assured with high-resolution, 30-item library function, and auto-optimization software that reduces errors.
- Easy to use in multi-step counting operations. Features three backlit LCD displays, including a centrally located count display, and an easy-to-navigate menu.
- Eliminate waiting time and increase control of your operation with accurate one-second results.

RANGER® COUNT 3000 *Counting Scale*

Precise Counting and Weighing with 30 Item Library

The high resolution Ranger Count 3000 has a 1:30,000 display resolution and 1:1,500,000 internal counting resolution. It also features advanced auto-optimization and low APW software which recalculates the average piece weight as the overall weight increases, ensuring accuracy and minimizing counting errors. The Ranger Count 3000 also offers a 30 item library data storage function that can store 12-digit part numbers, average piece weights, checkcounting or checkweighing parameters, tare weights and accumulated weights or counts with quick and simple retrieval of frequently used data.

Rapid Stabilization

Ranger Count 3000 produces accurate results within one second. The rapid stabilization virtually eliminates your wait time and allows you to move at a pace determined by you and not your weighing equipment. Work with confidence that your results will be displayed efficiently and with maximized performance.

The Most User-Friendly Counting Scale on the Market

The large bright displays and SmarText™ navigation make Ranger Count 3000 extremely simple to use. The three-window backlit LCD display includes a centrally-located count display and separate weight and piece weight displays. Eight function keys, including dedicated SAMPLE and TARE keys, and full numeric keypad make setup and input operations simple and straightforward.

More Connectivity Options

Ranger Count 3000 can support two-scale counting through the optional 2nd Platform to support weighing jobs that require a higher capacity platform or additional platform space. Ranger Count 3000 offers the highest level of connectivity in its class through its standard RS232 with optional Ethernet, second RS232, or USB that offers connection to multiple peripherals. Whether your data transfer requirements are simple or complex, Ranger Count 3000 offers the necessary functionality to meet your needs.

RANGER® COUNT 3000 *Counting Scale*

Portability and Versatile Power Options

With its convenient integrated carrying handle and rechargeable lead acid battery that can provide power for more than 210 hours between recharges, the Ranger 3000 can provide many hours of uninterrupted operation wherever you need it in your business. The Ranger includes an internal power transformer, so there are no outlet-hogging powerpacks, just a dedicated line cord.

Metrology

The Ranger Count 3000 series of scales meet or exceed the Class III accuracy requirements in accordance with NIST Handbook 44, Canada's Weights and Measures Regulations and OIML R76-1 (counting function not certified/approved).

Application Modes

- **Weighing**— Determine the weight of items in one or more weighing units -- lb, oz, lb:oz, kg or g.
- **Advanced Parts Counting** — Count parts fast for packaging and inventory control uses on the line or in the warehouse, with added software for APW low alert and automatic recalculation of APW during sampling.
- **Check Counting/Weighing** — Use the bright red/yellow/green LEDs to easily fill containers and packages by weight or by a specified number of parts.
- **Accumulation** — Keep a running total of all items, by weight, parts count or percent of reference. Great for tracking total throughput during each shift.

Statistics Printer Ready!

Combine the Ranger 3000 Count with the new OHAUS SF40A statistics printer and keep track of information critical for SQC processes.

Outline Dimensions

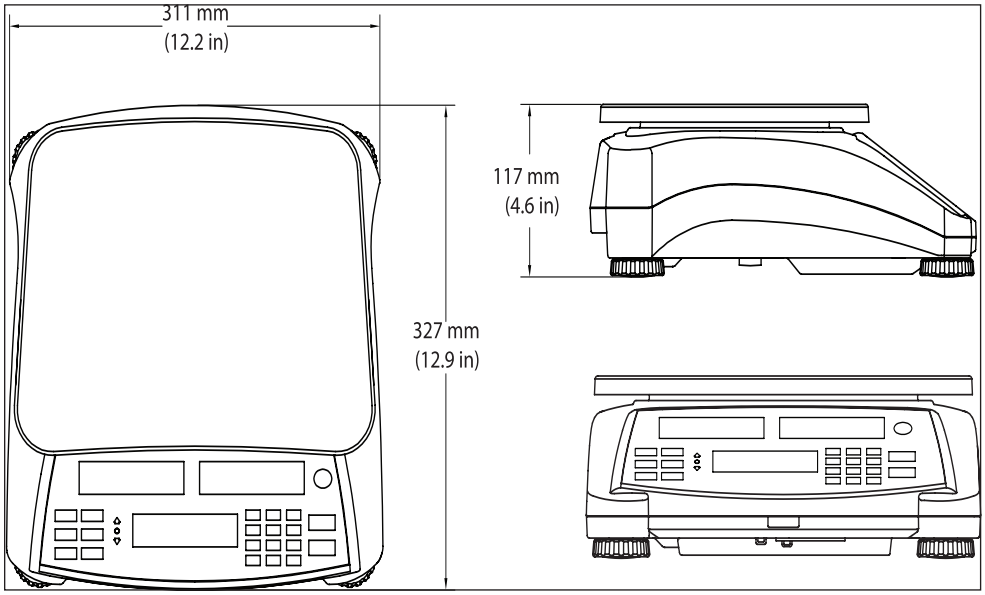

RANGER® COUNT 3000 *Counting Scale*

Model	RC31P1502	RC31P3	RC31P6	RC31P15	RC31P30
Default Capacity × Readability	1.5 kg × 0.00005 kg 3 lb × 0.0001 lb 1,500 g × 0.05 g 48 oz × 0.002 oz	3 kg × 0.0001 kg 6 lb × 0.0002 lb 3,000 g × 0.1 g 96 oz × 0.005 oz	6 kg × 0.0002 kg 15 lb × 0.0005 lb 6,000 g × 0.2 g 240 oz × 0.01 oz	15 kg × 0.0005 kg 30 lb × 0.001 lb 15,000 g × 0.5 g 480 oz × 0.02 oz	30 kg × 0.001 kg 60 lb × 0.002 lb 30,000 g × 1 g 960 oz × 0.05 oz
Certified Capacity × Readability	1.5 kg × 0.0005 kg 3 lb × 0.001 lb 1,500 g × 0.5 g 48 oz × 0.02 oz	3 kg × 0.001 kg 6 lb × 0.002 lb 3,000 g × 1 g 96 oz × 0.05 oz	6 kg × 0.002 kg 15 lb × 0.005 lb 6,000 g × 2 g 240 oz × 0.1 oz	15 kg × 0.005 kg 30 lb × 0.01 lb 15,000 g × 5 g 480 oz × 0.2 oz	30 kg × 0.01 kg 60 lb × 0.02 lb 30,000 g × 10 g 960 oz × 0.5 oz
Min. Recommended Sample Weight	1 g	2 g	4 g	10 g	20 g
Min. Recommended APW	0.005 g	0.01 g	0.02 g	0.05 g	0.1 g
Max. Internal Counting Resolution	1:1,500,000 Internal / 1:300,000 External				
Maximum Displayed Resolution	1:30,000	1:30,000	1:30,000	1:30,000	1:30,000
Certified/Approved Resolution	1:3,000	1:3,000	1:3,000	1:3,000	1:3,000
Construction	ABS housing, stainless steel platform				
Weighing Units	kg, g, lb, oz, lb:oz				
Application Modes	Weighing, Parts Counting, Checkweighing, Checkcounting, Accumulation				
Display	3-Window LCD display with white backlight, 0.8 in / 20.5 mm high digits				
Checkweighing Indicators	3 LED (yellow, green, red) with configurable operation and alert beeper				
Memory	30 item library				
Keypad	8 function, 12 numeric mechanical keys				
Zero Range	2 % or 10 % of full scale capacity				
Tare Range	Full capacity by subtraction				
Stabilization Time	1 second				
Auto-Zero Tracking	Off, 0.5, 1 or 3 divisions				
Safe Overload Capacity	150 % of capacity				
Power	100 - 240 VAC / 50 - 60 Hz internal universal power supply, internal rechargeable lead acid battery				
Battery Operation	210 hours continuous use between recharges with 12 hour recharge time				
Calibration	External, with user-selectable calibration weight				
Interface	Built-in RS232, optional 2nd platform, 2nd RS232, USB, Ethernet				
Operating Temperature Range	14 °F to 104 °F / -10 °C to 40 °C				
Platform Size (W × L)	11.8 x 8.9 in. / 300 × 225 mm				
Scale Dimensions (W × L × H)	12.2 x 12.9 x 4.6 in. / 311 × 327 × 117 mm				
Shipping Dimensions (W × L × H)	15.6 x 17.6 x 7.7 in. / 397 × 447 × 195 mm				
Net Weight	9.2 lb / 4.2 kg				
Shipping Weight	12 lb / 5.45 kg				

Other Standard Features and Equipment

30 item library (stores 12-digit part numbers, average piece weights, checkcounting or checkweighing parameters, tare weights and accumulated weights or counts), auto tare, APW Auto-Optimization and low APW alert, transportation handle, sealed front panel, menu lockswitch, up-front level indicator, adjustable leveling feet, selectable environmental and auto-print settings, stability indicator, overload and underload indicators, low battery indicator, auto shut-off

Compliance

- **Metrology:** NIST Handbook 44 (NTEP CC 13-022), Measurement Canada Weights and Measures Regulations (AM-5907C) and OIML R76-1 (R76/2006-NL1-12.46), (Class III, n_{max} 3000) (Counting function not certified/approved)
- **Product Safety:** CSA C22.2 61010-1, UL 61010-1
- **Electromagnetic Compatibility:** FCC Part 15 Class A, IEC 61326-1 (emissions Class B, immunity Industrial requirements)

Accessories

Second Scale, Kit 30037446
Ethernet Kit 30037447
Second RS232 Kit 30037448
Weigh Below Hook. 30037450
In Use Cover 30037451
USB Kit 30037449

MRM Metrology Inc.
905 595 1000
sales@MRMmetrology.com
www.MRMmetrology.com